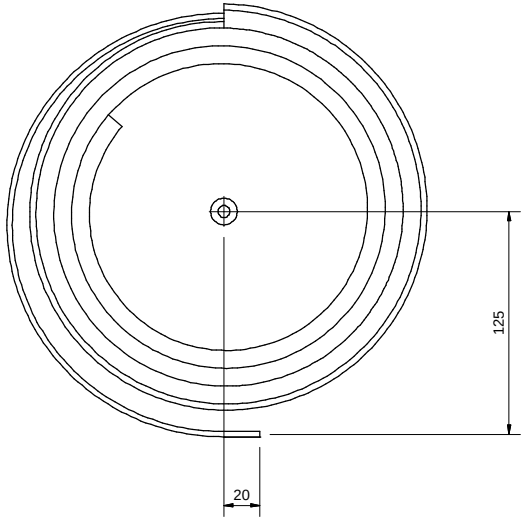

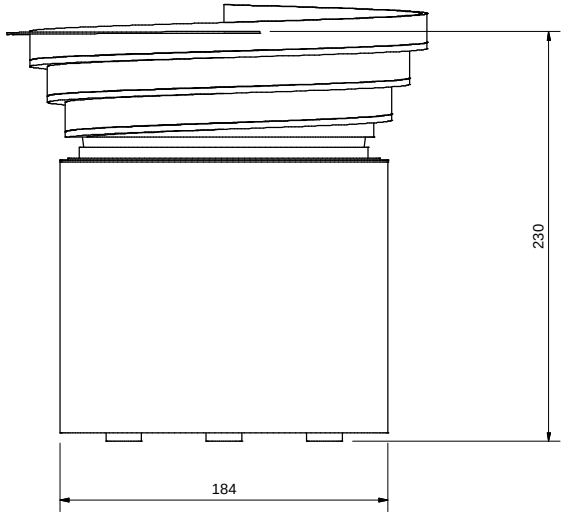

extra info / Add. Data			
onderdeel / Item	ref. nr.	omschrijving / Designation	
versie Version 00	datum Date 11-2-2011	wijzigingstekst / Modification description	© 2005 RADINE
voorvrs Prev ver	wijzingingsnr. Modif. No.		
schaal Scale		benaming / Decription TRILVULLER	getekend / Prep. by
afm. zonder tol. General tolerances ISO 2768-m			contr. / Checked by
tolerantie Tolerancing ISO 8015		extra benaming / Additional description	team / Group
massa / Mass		materiaal / Mater., semi-finished prod.	
pagina Sheet 1	formaat Size A2	*gereed producttekening* *Finished-part drawing*	document / Document KT1-SRC-N200-2+TAG-Z200-10-80-L

This drawing is the property of RADINE. All rights, including of copyright, are reserved. Without the prior written consent of the author, neither the drawing nor any part thereof may be copied, reproduced or made available to third parties or otherwise used for any purpose other than that for which it is intended. This drawing is to be treated as strictly confidential. Any infringement of these rights may be prosecuted by the author. Without the prior written consent of the author, neither the drawing nor any part thereof may be copied, reproduced or made available to third parties or otherwise used for any purpose other than that for which it is intended. This drawing is to be treated as strictly confidential. Any infringement of these rights may be prosecuted by the author. Without the prior written consent of the author, neither the drawing nor any part thereof may be copied, reproduced or made available to third parties or otherwise used for any purpose other than that for which it is intended. This drawing is to be treated as strictly confidential. Any infringement of these rights may be prosecuted by the author. Without the prior written consent of the author, neither the drawing nor any part, may be made available to third parties or misused in any other way.

Deze tekening is eigendom van RADINE. Niet toegestaan zonder voorafgaande schriftelijke toestemming van RADINE te kopiëren, te verspreiden of ter inzage te stellen aan derden of te gebruiken voor een ander doel dan waarvoor deze is bestemd. Deze tekening is als zodanig geheim te houden. Inbreuk op deze rechten is strafbaar volgens de Wet op de Intellectuele Eigendom. Deze tekening is eigendom van de maker en dient op verzoek onverwijld te worden teruggezonden.