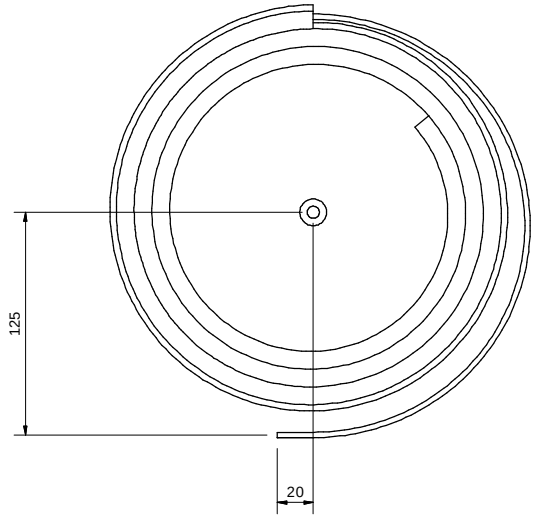

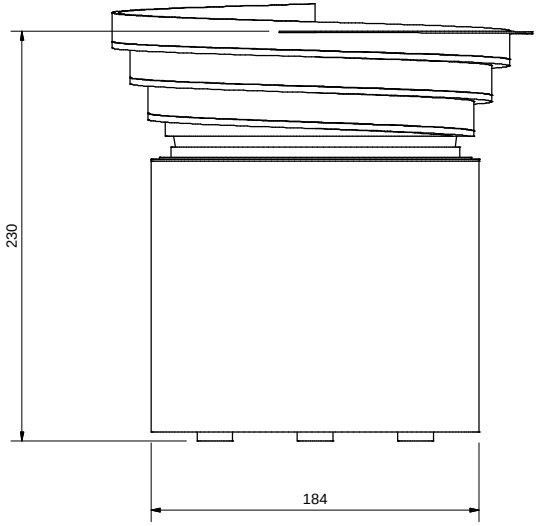

extra info / Add. Data			
onderdeel / Item	ref. nr.	omschrijving / Designation	
versie Version 00	datum Date 11-2-2011	wijzigingstekst / Modification description	© 2005 RADINE
voorvrs Prev ver	wijzingingsnr. Modif. No.		
schaal Scale		benaming / Decription TRILVULLER	getekend / Prep. by
afm. zonder tol. General tolerances ISO 2768-m			contr. / Checked by
tolerantie Tolerancing ISO 8015		extra benaming / Additional description	team / Group N32 IS/INL-RIAD
massa / Mass		materiaal / Mater., semi-finished prod.	
pagina Sheet 1	formaat Size A2	*gereed producttekening* *Finished-part drawing*	document / Document KT2-SRC-N200-2+TAG-Z200-10-80-R

This drawing is and remains the property of RADINE. All rights, including of copyright, are reserved. This drawing is not to be reproduced or made available to third parties or misused in any other way.